6000/6583

1-800-826-5890 USA
1-888-675-5483 Canada
www.pauluhn.com

APPROVALS

- ABS
- Type 4X
- Conforms to IP 66

FEATURES

- 300 Amp 250v DC or 600v AC single or double receptacles.
- Corrosion resistant enclosures in heavy wall cast brass or copper-free marine-grade cast aluminum.
- All units have high impact nylon interior bodies with marine grade silver plated brass contacts.
- Plugs and receptacles are designed for up to a 2/0 or .473 diameter cable at 300 Amp max.
- 5 year warranty.

APPLICATIONS

- Marine environments
- Offshore oil and gas platforms
- Drill ships and exploration vessels
- Tankers
- Salvage/recovery vessels
- Construction yards

DIMENSIONS

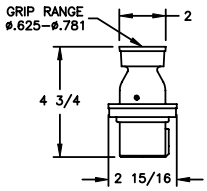

6000P

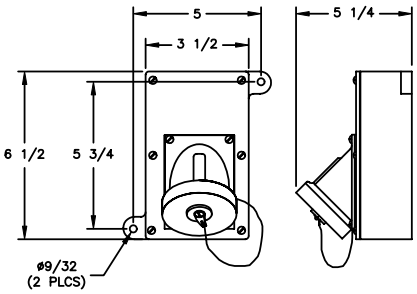

6000

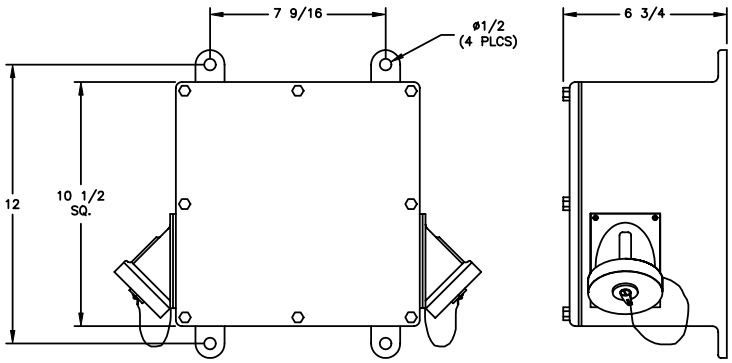

6583

Dimensions in inches

TECHNICAL SPECIFICATION

HOUSING
Heavy wall cast brass or copper-free marine-grade cast aluminum with a natural finish.

HARDWARE
Stainless steel.

MOUNTING
Units are mounted using two or four mounting holes.

VOLTAGE OPERATION
300 Amp 250v DC or 600v AC in a single or double outlet.

RECEPTACLES
High impact interior bodies with marine grade silver plated brass contacts. Both the plug and receptacle are designed for up to a 2/0 welding cable of .473 diameter.

ORDERING REFERENCES

MARINE WATERTIGHT WELDING RECEPTACLES AND PLUGS

DESCRIPTION	BRASS WEIGHT (lbs)	BRASS (B) TYPE	ALUMINUM (A) TYPE
Single Receptacle	7.5	6000B	6000A
Double Receptacle	44.0	6583B	6583A
Plug	2.8	6000BP	6000AP

SPARE PARTS

ANGLE COVER GASKETS		**BOX GASKETS**	
Single Receptacle	GKT4005	Single Receptacle	GKT5057
Double Receptacle	GKT4005	Double Receptacle	GKT4003
RECEPTACLE CAPS		**PLUG CAPS**	
Brass	INX8014B	Brass	INX6565B
Aluminum	INX8014A	Aluminum	INX6565A
INTERIORS			
Receptacle	INX3047		
Plug	INX3048		

© Copyright 2004. Not to be reproduced without express permission of Pauluhn Electric Manufacturing, LLP.